Low Power Thyristors

Type	Maximum repetitive peak reverse voltage $U_{DRM} \triangleq U_{RRM}$ [V]	Maximum mean on-state current I_{TAV} at ϑ_C [A/°C]	Maximum RMS on-state current I_{TRMS} [A]	Maximum surge on-state current I_{TSM} $\vartheta_j = 25°C$, 10 ms [A]	I^2t-value $\int i^2dt$ $\vartheta_j = 25°C$, 10 ms [A²s]	Maximum junction temperature ϑ_j [°C]	Thermal resistance $R_{th\,JC}$ [K/W]	Critical rate of on-state voltage rise $S_{u\,crit}$ [V/µs]	Critical rate of on-state current rise $S_{i\,crit}$ [A/µs]	Turn-off time t_q [µs]
Plastic case sealed										
BSt E 03	400... 700	0.6/45	1.0	140	100	100	85	20	100	12
BSt B 01	100... 700	0.8/45	4.7	34	5.8	120	72	5...100	50	80
BSt C 07	100... 700	0.9/45	5.5	70	24	125	72	5...100	200	80
BSt B 02	100... 700	3.0/64	4.7	34	5.8	120	63	5...100	50	80
BSt C 02	100... 700	3.5/67	5.5	70	24	125	63	5...100	100	80
TO 66 case										
BSt CC 01	400... 750	3.2/68	5.0	60	18	100	4.5	100...700	200	8
BSt C 06	400... 700	3.2/67	5.0	60	18	100	4.5	100...500	200	8
BSt E 04	400... 700	4/77	6.3	150	110	100	3.5	50	100	12
BSt C 05	100... 700	5/76	8.0	70	24	125	4.5	5...100	50	50
Stud case										
BSt C 03	200...1200	16/59	25	180	160	125	1.8	20...200	150	60
BSt D 03	200...1200	16/85	25	250	310	125	1.5	20...200	150	60
BSt E 99	600...1500	22.5/64	35	500	1250	125	1.5	50...400	70	75

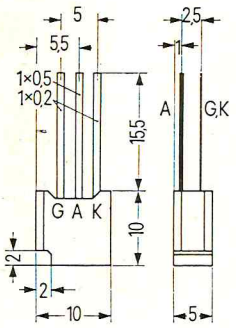

BSt B 01
BSt C 07
BSt E 03

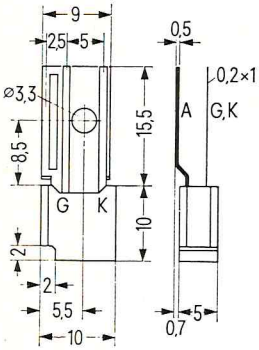

BSt B 02
BSt C 02

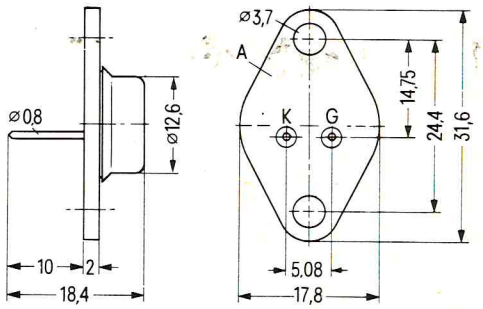

BSt C 05
BSt C 06
BSt CC 01
BSt E 04

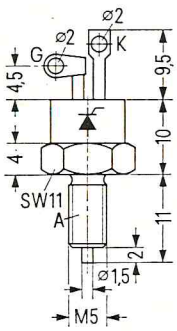

BSt C 03
BSt D 03

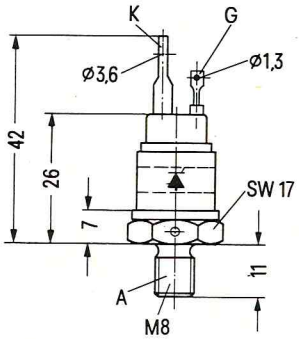

BSt E 99

Dimensions in mm